Manual

CMF 10

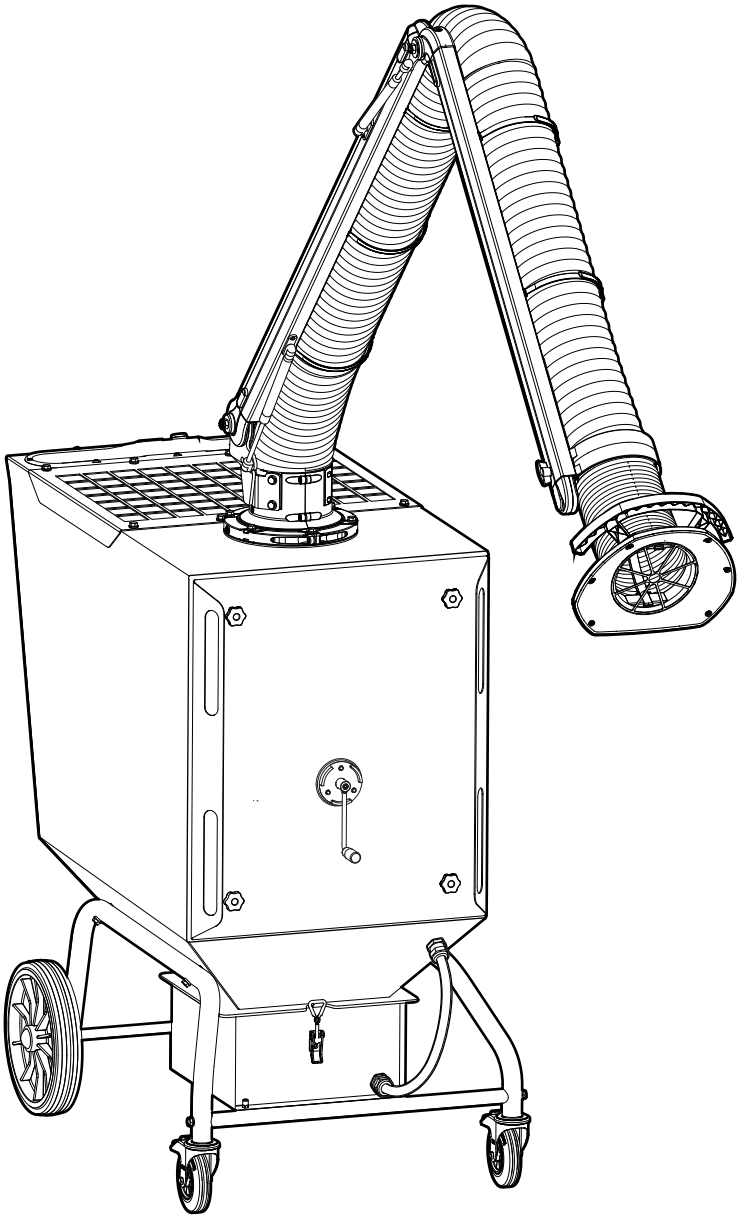

FUMEX
PURE ADVANTAGE

TABEL OF CONTENTS

1 Introduction 3
1.1 The manual 3
1.2 Declaration 3
1.3 Warranty 3
1.4 Manufacturer 3

2 Safety 4
2.1 General 4
2.2 Warning levels (on product) 4
2.3 Safety signs 4
2.4 Protective equipment 4
2.5 General warnings & information 4

3 Product Description 5
3.1 Serial number & product name 5
3.2 Labels and safety signs 5
3.3 Areas of Use 6
3.4 Design 6
3.5 Function 7

4 Preparation for use 8
4.1 Transport & storage 8
4.2 Electrical equipment 8
4.3 Assembly & installation 8
4.3.1 Unpacking 8
4.3.2 Extraction arm 8
4.3.3 Power switch 11

5 Commissioning 11
5.1 Start-up 11

6 Operation 12
6.1 Moving the machine 12
6.2 Control panel 12
6.3 Filter cleaning 12

7 Troubleshooting 13
7.1 Troubleshooting guide 13

8 Maintenance 14
8.1 Cleaning 14
8.2 Maintenance schedule 14
8.3 Replacing the filter cartridge 15
8.4 Emptying the dust collector 16
8.5 Extraction arm 16
8.6 Checking air connections 16

9 Decommissioning 17
9.1 Final decommissioning/disassembly/disposal 17

10 Technical information 17
10.1 Technical data 17
10.2 Circuit diagram electronics 18
10.3 Exploded-view drawing 19
10.3.1 Filter unit 19
10.3.2 Extraction arm 20

11 Accessories & Spare Parts 21

12 Notes 23

© Fumex AB, 2021
Subject to change.

Foreword

FUMEX operates in the environmental technology sector and specialises in extraction arms, fans, and filters for all work environments. The company strives to create work environments free from airborne contaminants.

Our products are manufactured using modern methods and undergo extensive quality inspections. The products comply with applicable safety and environmental requirements.

If you have any questions about FUMEX or our products, please contact your dealer or the FUMEX sales department.

1 Introduction

1.1 The manual

To ensure your knowledge of the product, you must read this manual before use.

The information in this manual is intended to facilitate the installation, operation, maintenance, troubleshooting, and repair of the product. The manual also provides the user with a technical understanding and basic safety instructions to minimise risks when working with the product, as well as to increase the product's service life.

The manual should be considered a part of the product and should always be accessible and in close proximity to the product.

The following symbols are referred to in the manual:

Safety instructions (applicable to people or machinery) that must always be adhered to. Risk of death or risk of personal injury or damage to property.

Recommendations which convey important information for an optimally functioning product.

1.2 Declaration

The product is CE certified and conforms to all applicable provisions in directives and standards as follows:

- Machinery Directive 2006/42/EC
- EMC Directive 2014/30/EU
- Safety of Machinery EN ISO 12100: 2010
- Electrical Equipment of Machines EN 60204-1

For a full EC Declaration, please contact FUMEX.

1.3 Warranty

To preserve the validity of the warranty, it is forbidden to modify or re-engineer the product during the warranty period without first obtaining prior approval from FUMEX. This is also applicable to any spare parts used which do not correspond to the manufacturer's specifications.

Damage caused by improper use of the product will result in:

- the warranty being voided
- the EC Declaration and CE certification being voided.

The warranty period is one year from the date of purchase and covers the product and its constituent parts. All manufacturing defects are covered by the warranty. FUMEX replaces defective parts in accordance with NL 17.

FUMEX is not liable for any consequential or incidental damage, or any loss of income as a result of or in connection with the warranty case.

The onus is on the buyer to select the appropriate product for the intended use. Any modifications to the FUMEX product or its intended use will void the warranty.

1.4 Manufacturer

FUMEX AB
Tel. no.: +46 910-361 80
Email: info@fumex.se

Verkstadsvägen 2
SE-931 61 Skellefteå
Sweden

2 Safety

2.1 General

The product is safe to use. It is designed in such a way that hazardous parts are only located in inaccessible areas. Even so, if the product is not used correctly or as intended, it may be hasardous to the user or cause damage to the product. The user should therefore be informed and trained to handle the product's safety features.

2.2 Warning levels (on product)

Safety signs on FUMEX products make use of colour codes and signal words in accordance with ISO 3864-2.

DANGER **Red (DANGER)** – used to indicate an imminently dangerous situation which, if not avoided, will result in death or serious personal injury.

WARNING **Orange (WARNING)** - used to indicate a potentially dangerous situation which, if not avoided, may result in death or serious personal injury.

CAUTION **Yellow (CAUTION)** - used to indicate a potentially dangerous situation which, if not avoided, may result in moderate or minor personal injury.

2.3 Safety signs

Refer to **3.2 Labels and safety signs.**

2.4 Protective equipment

No special protective equipment is required to use the product. However, personal protective equipment such as safety glasses, respiratory protection, and safety gloves must be worn when replacing filter cartridges and emptying the dust collector.

2.5 General warnings & information

The product must not be modified.

The product must not be operated without safety devices.

Power to the machine must be switched off prior to maintenance, repair, or adjustment.

The machine may only be used in perfect technical condition and according to its intended use as described in Section **3.3 Areas of Use**. Faults that may jeopardise safety must be rectified immediately.

Work on the machine's electrical equipment may only be carried out by a licenced electrician in accordance with applicable local electrical safety regulations.

There is always risk associated with the machine's moving parts (e.g. cutting, clamping or gripping points).

In the event of fire, hatches or service doors must not be opened.

Under no circumstances may water be used to extinguish/cool in the event of fire or heat build-up. A powder extinguisher or other suitable extinguisher must be used instead.

The machine must not be used in a potentially explosive atmosphere or to extract dust and gases in explosive concentrations.

Air containing sparks must not be drawn into the extraction arm. If welding is performed which generates a large amount of sparks, a spark arrestor must be used (refer to Chapter **11 Accessories & Spare Parts**).

All work on the machine must be carried out by certified and authorised personnel.

The machine must not be used in confined areas without exhaust ventilation.

For maintenance work where contact with dust occurs, personal protective equipment such as safety glasses, respiratory protection, and safety gloves must be worn.

The surface on which the machine is used should be flat and smooth.

The machine should only be used by personnel with good knowledge of the machine and its operation.

Waste disposal must be carried out in accordance with the relevant national regulations.

3 Product Description

3.1 Serial number & product name

Refer to the product nameplate.

3.2 Labels and safety signs

Safety signs that are missing or illegible must be replaced before the machine is used.

According to **Fig. 1.**

1. Fumex logotype
2. Safety sign
   "Unplug before opening hatch"
3. Control panel switch
4. Decal with W3 approval
5. Nameplate
6. Motor rotation arrow
7. Fumex logotype

1

2

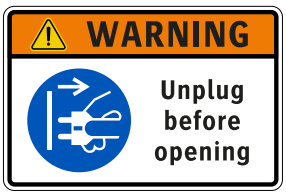

3

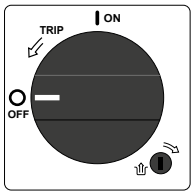

4

5

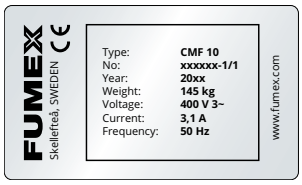

6

7

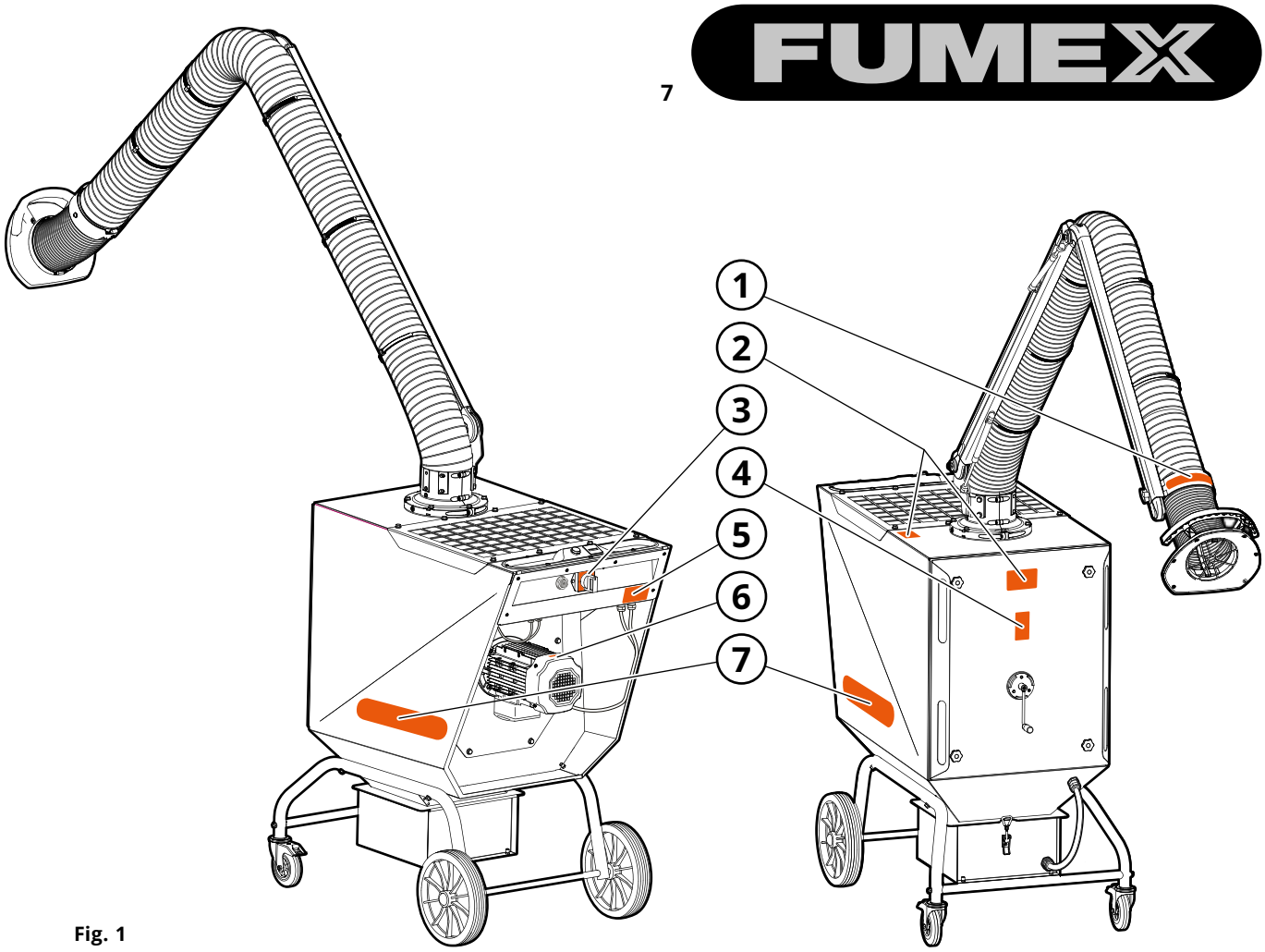

Fig. 1

3.3 Areas of Use

The CMF filter unit is designed for the extraction and filtration of welding fumes indoors, in accordance with ISO 15012-1.

3.4 Design

See **Fig. 2**.

1. Extraction arm
2. Damper
3. Swivel
4. Exhaust grille
5. Audiable alarm
6. Indicator light
7. Counter
8. Power switch
9. Hood
10. Filter hatch
11. Distribution plate
12. Dirty side
13. Filter cartridge
14. Filter brush
15. Crank
16. Pressure distribution hose
17. Straining compartment
18. Dust collector
19. Lockable caster wheels
20. HEPA filter/Silencer
21. Control panel
22. Differential pressure gauge
23. Clean side
24. Impeller
25. Motor
26. Wheel

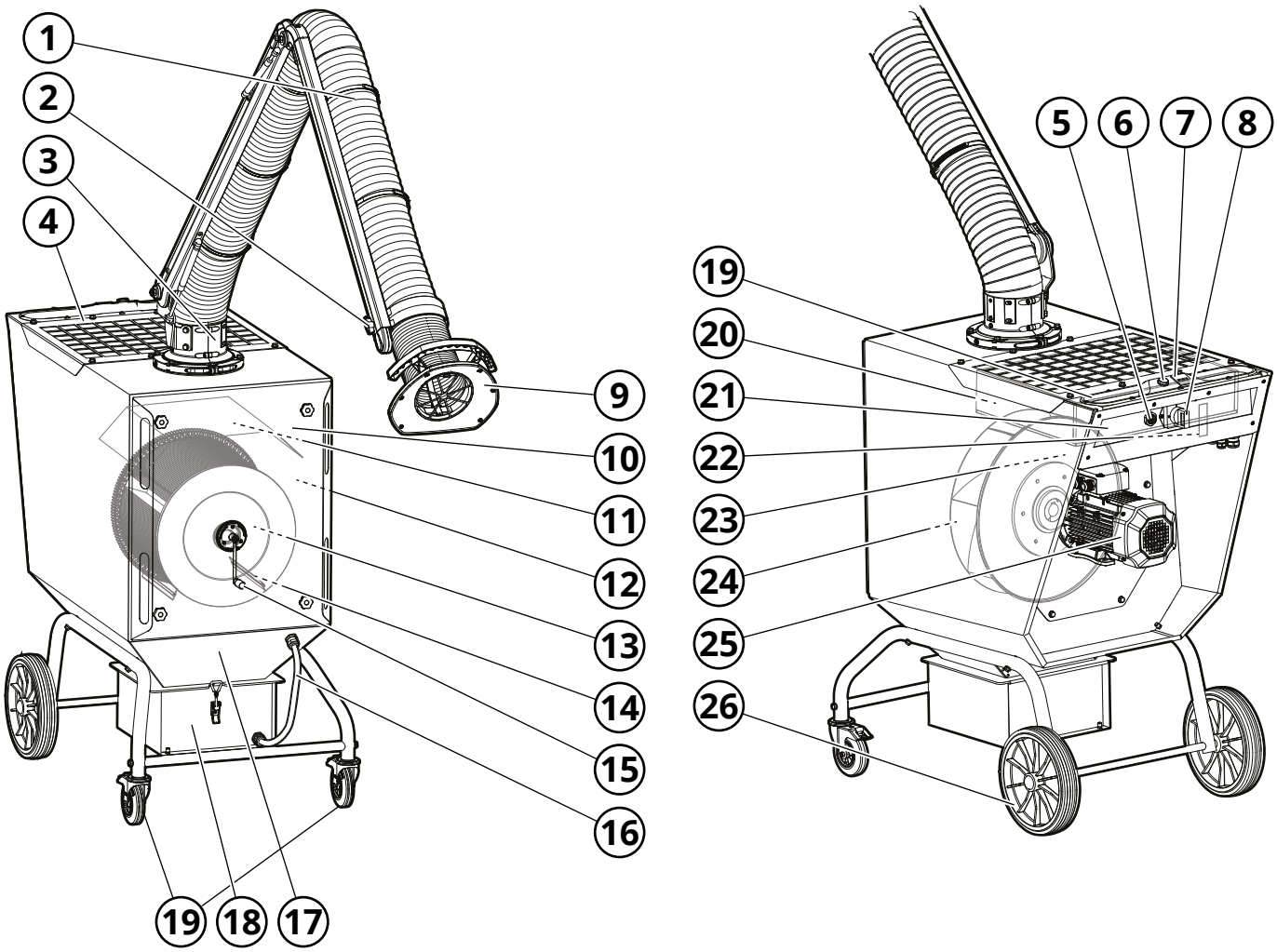

Fig. 2

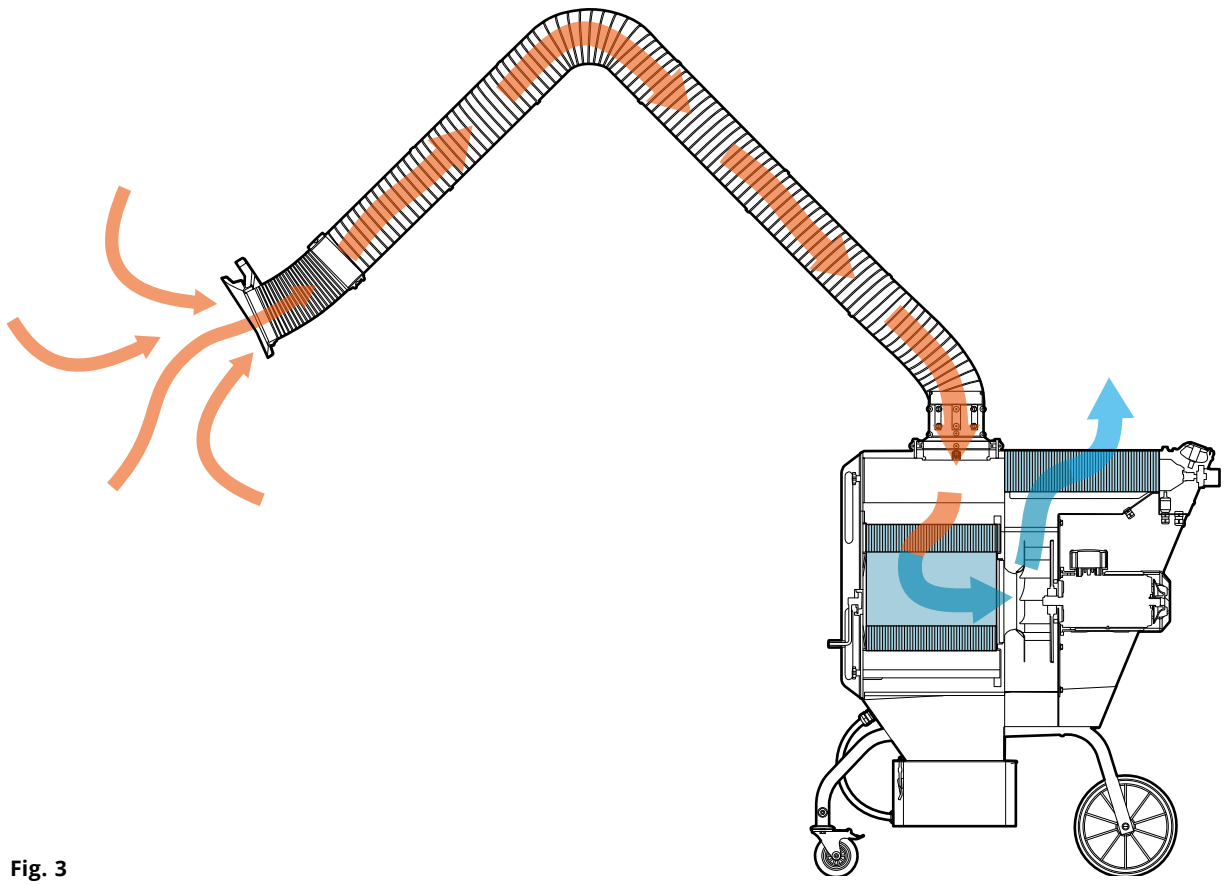

Fig. 3

3.5 Function

The CMF filter unit is a portable cartridge filter with built-in fan and top mounted extraction arm for purging dust-filled and contaminated air in ventilated workshop environments.

Contaminated air is drawn in via the extraction arm (1, **Fig. 2**) and transported to the dirty side (12) of the assembly where the air is filtered with high efficacy through the horizontally-mounted filter cartridge (13). The clean air is then drawn through the impeller (24) and discharged from the clean side of the filter unit (23) through the exhaust grille (4).

On the control panel (21) is the counter (7) and an indicator lamp (6) for operation, as well as a power switch (8) and audiable alarm (5) (see section **6.2 Control panel**). The control panel also functions as a handle when moving the filter unit, and a relieving surface.

When the filter cartrige needs to be cleaned or changed, the indicator light (6) goes out and the audiable alarm (5) emits an acoustic signal. Filter cleaning is performed manually by rotating the filter cartridge with the crank (15), which will cause the brushes (14) to dislodge accumulated dust. The straining compartment (17) then conveys the dust into the dust collector (18).

The extraction arm is mounted on a 360° swivel (3) and has external support arms. Gas springs help to balance the extractor weight, and the extractor resistance is controlled by each joint. The hood (9) is designed for maximum suction efficacy and is ideal for capturing welding fumes. A manual damper (2) at the hood attachment point opens and closes the airflow.

The filter unit is equipped with lockable caster wheels (19) for easy movement and locking.

Accessories include a spark trap, silencer, and HEPA filter. Refer to Chapter **11 Accessories & Spare Parts**.

4 Preparation for use

4.1 Transport & storage

Protect the machine and its parts from rain, snow, aggressive atmospheres and other harmful effects.

4.2 Electrical equipment

Faults in the electrical system must be rectified immediately.

Check all external wires as well as the power switch, light, timer and motor for visible external damage. Repair any damage immediately.

4.3 Assembly & installation

National rules and regulations must always be adhered to during assembly work.

4.3.1 Unpacking

1. Remove the packaging and slowly roll the product off the pallet.
2. Check for any damage and missing parts. Contact a local Fumex representative directly if there is damage or parts are missing.
3. Dispose of the packaging material according to local recycling regulations.

4.3.2 Extraction arm

Mount the extraction arm on the assembly as shown in **Fig. 4** to **Fig. 14**.

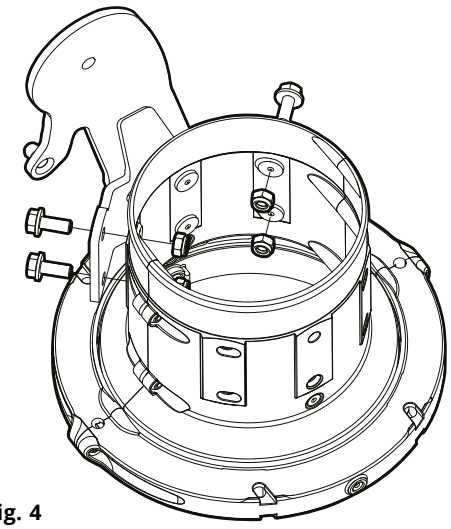

Fig. 4

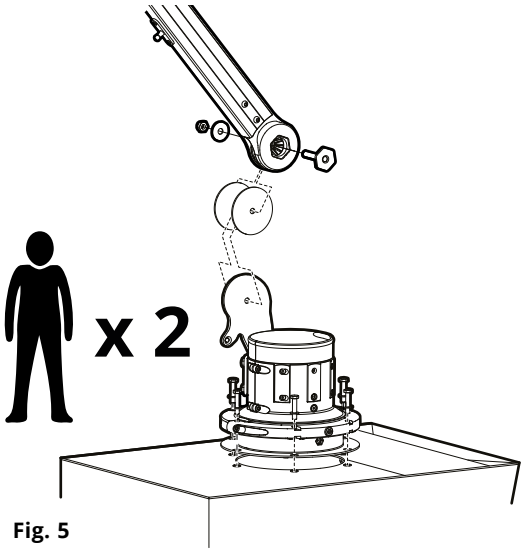

Fig. 5

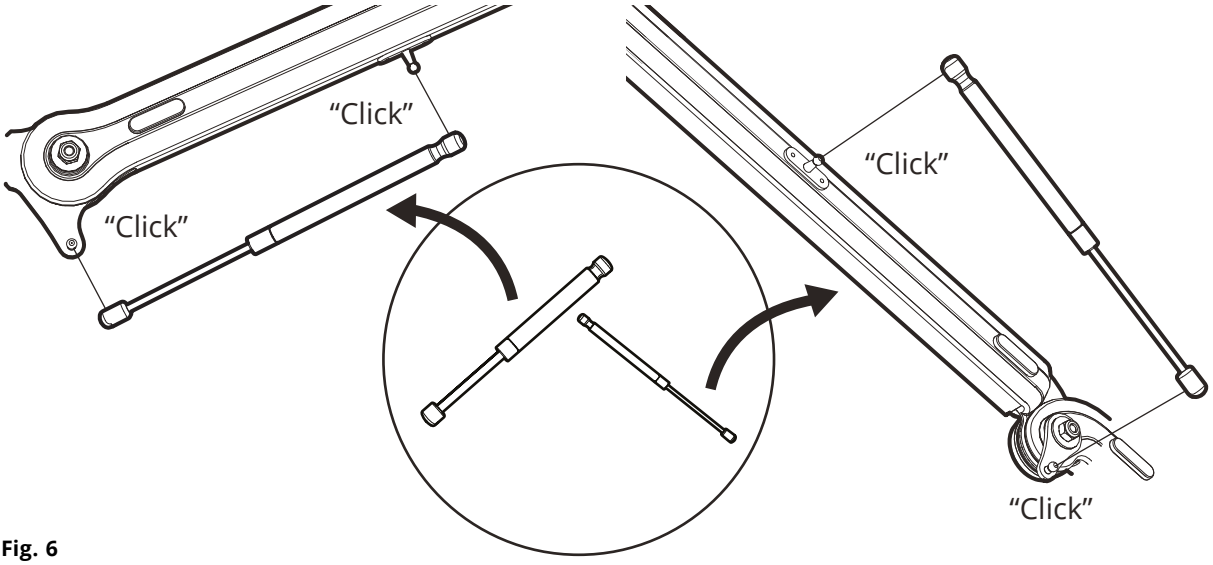

Fig. 6

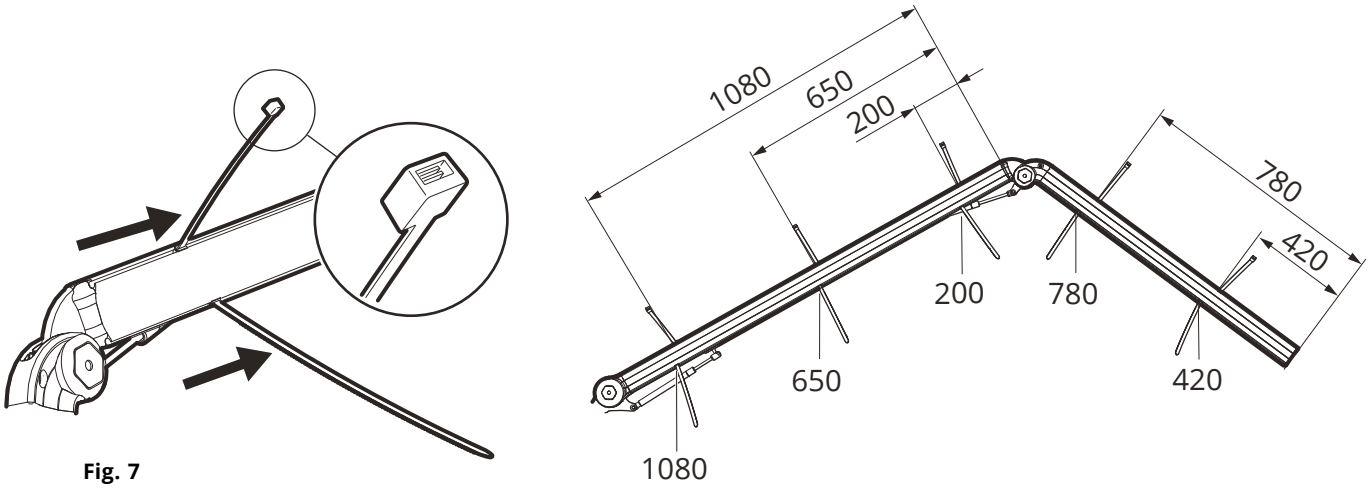
1080
650
200
780
420
200
780
650
420
1080

Fig. 7

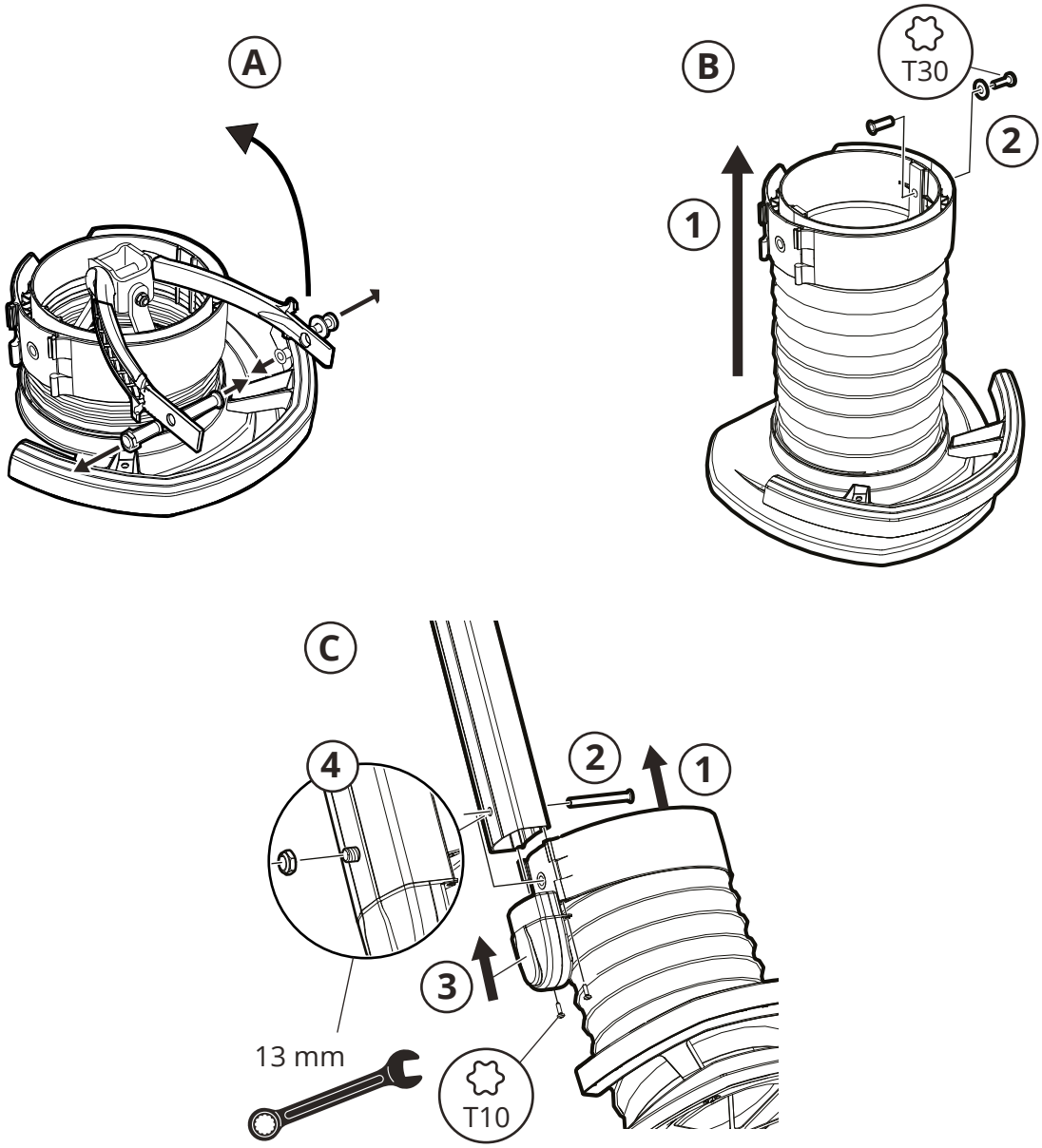
A
B
T30
2
1
C
4
2
1
3
13 mm
T10

Fig. 8

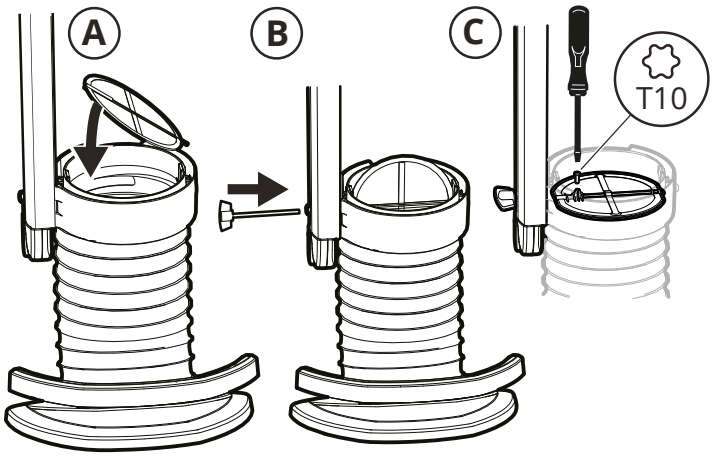

Fig. 9

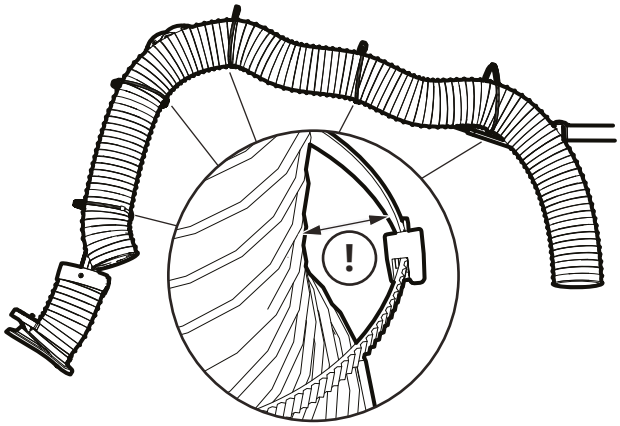

Fig. 10

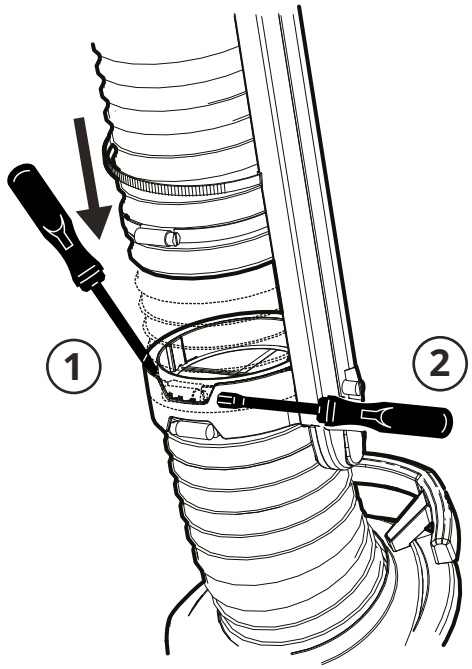

Fig. 11

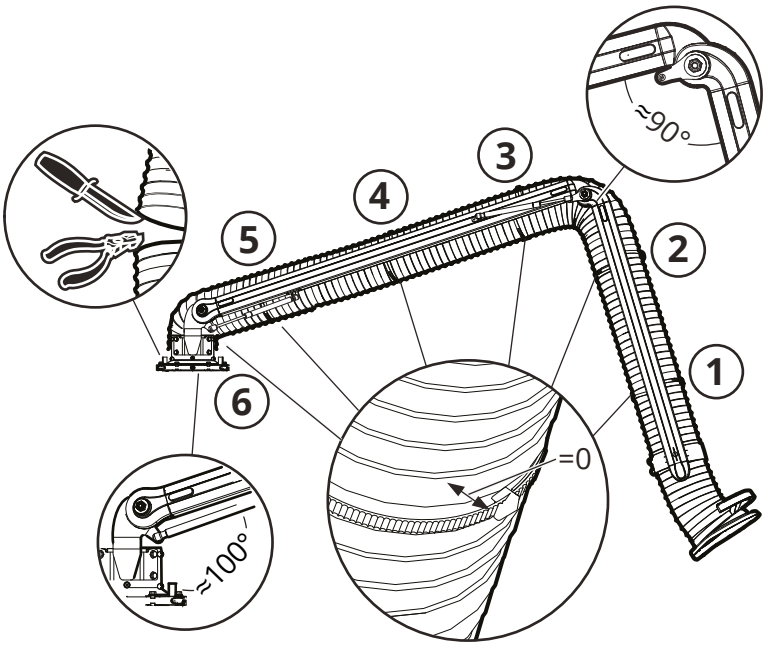

Fig. 12

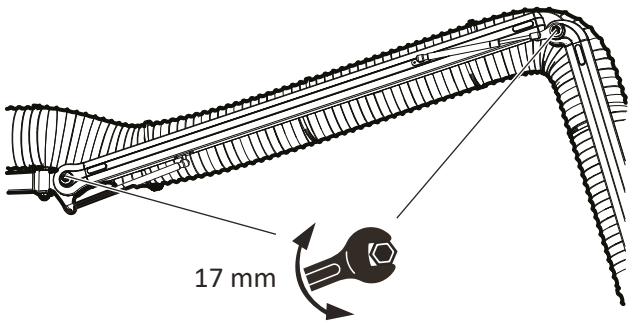

Fig. 13

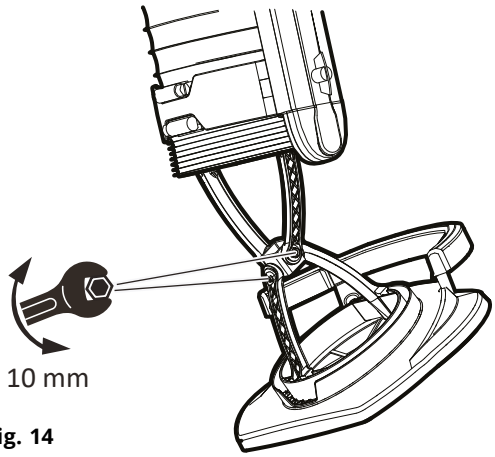

Fig. 14

4.3.3 Power switch

Install the power switch as shown in **Fig. 15.**

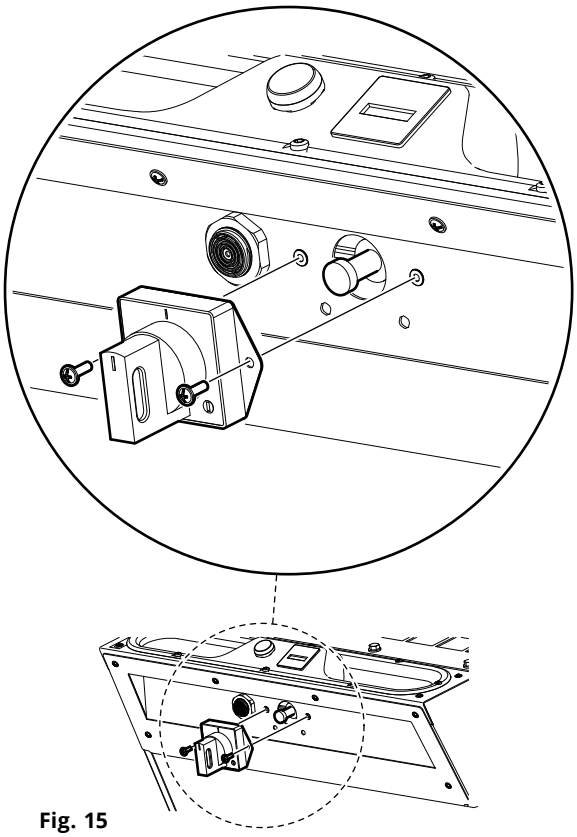

Fig. 15

5 Commissioning

5.1 Start-up

Any faults must be rectified before turning on the power.

1. Connect the plug to the wall socket.

2. Start the machine.

If the machine turns off automatically, the power consumption is too high. Please contact FUMEX.

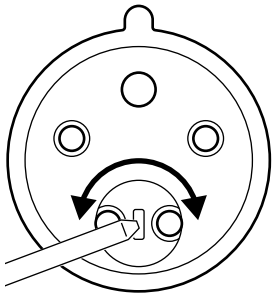

Fig. 16

3. Check the rotational direction of the fan motor. The fan motor rotation direction is checked by starting the fan, then stopping the fan. When the speed decreases, you can see which way your engine rotates through the hood for the fan cooling (where the decal is located, according to **Fig. 1** pos. 6).
If the direction of rotation is incorrect, use a flat screwdriver to reverse the phase on the plug as shown in **Fig. 16**.

4. Check the rotational direction again.

5. Turn off the fan.

The mobile filter unit is now ready for operation.

6 Operation

The fan motor generates heat and is equipped with a cooling fan. The cooling fan inlet is located at the back of the motor. Do not block the inlet.

Note that electronic equipment is always sensitive to static electricity, high humidity, high temperature, and grid disruption.

6.1 Moving the machine

Inclined surfaces

When moving the machine on steeply inclined surfaces, using the handles in the filter hatch will reduce the risk of the caster wheels turning the machine with the incline.

Thresholds and obstacles

At thresholds or minor obstacles, place a foot on the rear wheel axle, grip the handles in the top panel, and gently tip up the front section to cross the obstacle without knocking the front wheels.

6.2 Control panel

See **Fig. 17.**

1. Control panel
2. Indicator light
3. Counter
4. Audiable alarm
5. Power switch

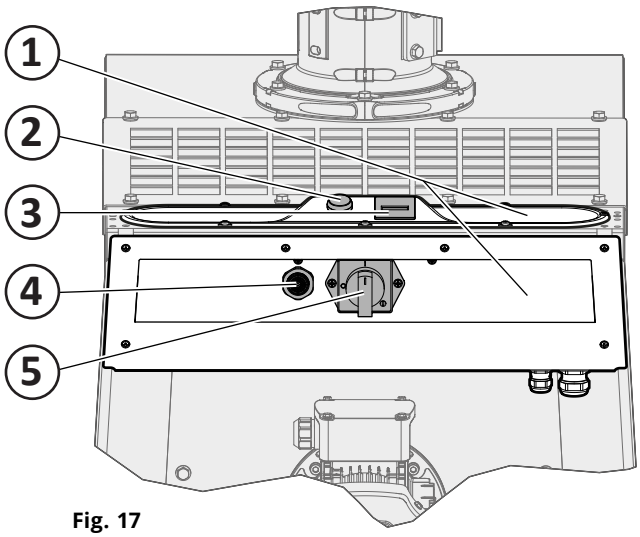

Fig. 17

Start/stop

The power switch (5) starts/stops the fan and operation is indicated by the indicator light (2).

Audiable alarm

The need for filter cleaning is indicated by the audiable alarm (4). When the pressure drop reaches 1600 Pa, the audiable alarm will signal, meaning that the filter cartridge must be cleaned. If the audiable alarm is ignored and filter cleaning is not performed, there is a risk the airflow may drop below the minimum flow (~600 m3/h).

Counter

To check and determine the cleaning intervals and service life of the filter cartridge and HEPA filter, the machine is equipped with a counter (3). To ensure precise cleaning intervals, it is recommended that the user note the value at the time of each filter cleaning under Chapter **12 Notes**.

6.3 Filter cleaning

When the buzzer emits an audible signal, filter cleaning should be performed. Clean the filter according to the following procedure:

1. Make sure the wheels are locked.
2. Rotate the filter cartridge via the crank, approx. 5 revolutions. See **Fig. 18.**
3. Start Filter Unit CMF.

If the buzzer continues to signal after repeating the procedure approx. 3 times, the filter medium is most likely depleted and the filter cartridge should be replaced.

4. If the buzzer continues to signal, repeat step 2 and 3 above.

Check the counter and note the value in the manual under Chapter **12 Notes**, for precise cleaning intervals.

5. Empty the dust collector as required, refer to Section **8.4 Emptying the dust collector**.

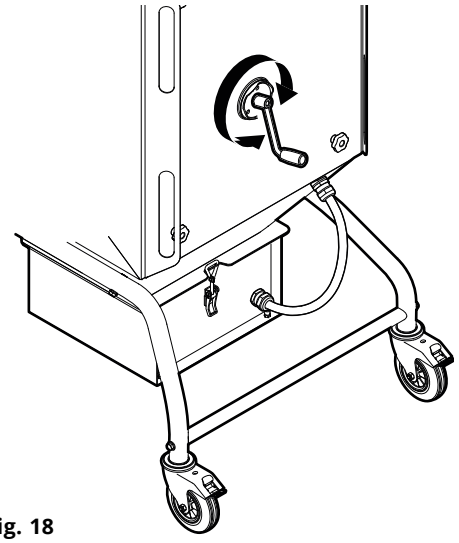

Fig. 18

7 Troubleshooting

Troubleshooting with the power switched on may only be carried out by a licenced electrician.

7.1 Troubleshooting guide

The troubleshooting guide contains information for identifying faults which are simple to rectify. Always perform the troubleshooting procedures before contacting FUMEX.

TROUBLESHOOTING GUIDE		
Symptom	**Possible cause**	**Recommended action**
1. Poor airflow.	Differential pressure gauge not working	Check the differential pressure gauge hoses and hose connections (refer to Section **8.6 Checking air connections**).
	Cleaning not performed	Perform the filter cleaning procedure (refer to Section **6.3 Filter cleaning**).
	Filter cartridge full	Replace filter cartridge.
	HEPA filter full (accessory)	Replace HEPA filter.
	Fan defective	Check fan suction capacity. If the fan is defective, contact Fumex.
	Hose clogged	Clean the hose interior.
	Hole in hose	Replace hose.
2. Material accumulates in the straining compartment.	Wet dust is building up on the walls	Dry dust is being expelled.
	Dust collector full	Check the level in the dust collector, and empty it if necessary.
3. Visible dust on the clean side of the filter unit.	Defective filter cartridge	Replace the defective filter cartridge.
	Filter cartridge incorrectly installed	Install the filter cartridge correctly.
	Incorrect filter material is being used	Contact the customer service/servicing department.
4. Leakage in filter hatch.	Filter hatch incorrectly mounted	Mount the filter cover correctly.
	Gaskets ineffective	Check gaskets and replace if necessary.
5. Dust emitted from the suction opening during and/or after purging.	Damper open	Close damper.
	Defective damper	Replace damper.
6. Ineffective cleaning.	Imprecise cleaning interval	Change time between intervals in the maintenance schedule.
	Filter cartridge full	Replace filter cartridge.
	Filter cartridge incorrectly installed	Install the filter cartridge correctly.
	Defective brushes	Check and clean brushes and replace if necessary
7. Fan has stopped.	Power supply problem	Check power supply.
	Connector short circuit	Check for moisture in the motor connection.
	Stuck impeller	Check for any foreign objects in the fan housing.
		Make sure motor bearings are functioning.
8. Fan performance loss.	Motor winding	Check the resistance between windings.
	Debris	Check for any foreign objects in the fan housing.
	Incorrect rotational direction	Check rotational direction.

8 Maintenance

Please remember that only original spare parts may be used.

Make sure that all moving parts are secured to prevent unintentional movement.

8.1 Cleaning

The product should be cleaned with clean cloths and neutral detergents to avoid damage.

8.2 Maintenance schedule

Depending on the changing operating conditions between the different systems, the intervals for recommended maintenance may differ. Users should therefore determine their own maintenance intervals.

The checklist for maintenance is designed for normal use of the machine. The recommended intervals are approximate and refer to the time after the first start-up.

FUMEX recommends the following maintenance schedule:

MAINTENANCE SCHEDULE				
Interval	**Item**	**Inspection module**	**Maintenance instructions**	**Date**
When necessary	**1.1**	Filter unit CMF	Clean exterior. See section **8.1 Cleaning**.	
	1.2	Extraction arm	Adjust friction joints to the desired resistance.	
Daily	**2.1**	Dust collector	Check the level and empty if necessary.	
	2.2	Filter hatch	Make sure there are no leaks.	
Once a month	**3.1**	Filter cleaning	Check functionality by purging the filter (refer to Section **6.3 Filter cleaning**).	
Every three months	**4.2**	Cartridge filter	Check for dust at the outlet in the clean section. Rectify if necessary.	
Every six months	**5.1**	Electrical equipment	Check all electrical equipment, such as the cabling, plug, power switch, lamp, timer, and motor for visible external damage. Replace if necessary.	
	5.2	Assembly	Check for leaks, damage and wear.	
	5.3	Extraction arm	Make sure there are no leaks.	
	5.4	Dust collector	Make sure there are no leaks.	
	5.5	Motor (fan)	Check functionality. Replace if necessary.	
	5.6	Impeller	Check for any damage and clear away foreign objects if necessary. Replace a damaged impeller.	

8.3 Replacing the filter cartridge

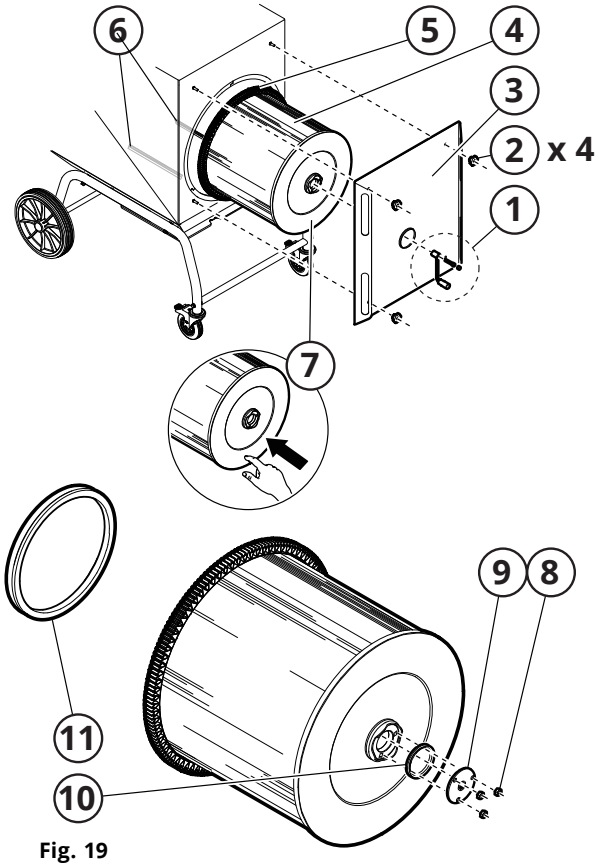

Fig. 19

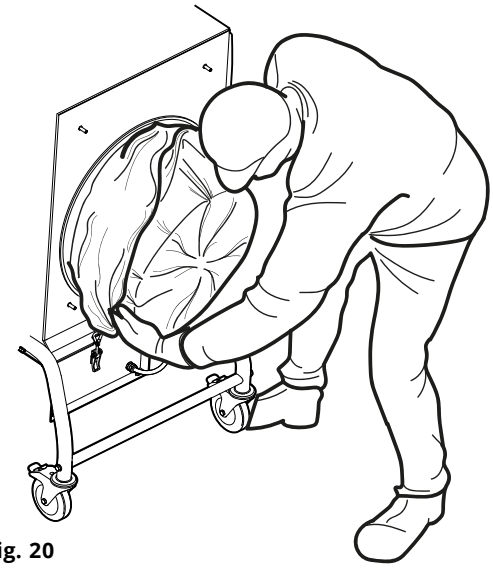

Fig. 20

Removal

1. Unscrew and detach the crank, see part 1, **Fig. 19**.
2. Unscrew (2) and remove the filter hatch (3).
3. Remove the nuts (8), mounting plate (9), and small sealing strip (10). Set aside for refitting to the new cartridge filter.
4. Drape Filter Bag CMF PCW3 over the filter cartridge, see **Fig. 20**. Make sure the filter bag does not get stuck on the brushes under the filter cartridge.
5. Remove the filter cartridge (4, **Fig. 19**) and filter bag from the assembly. Set down on the floor with filter end (7) downwards.
6. Remove the large sealing strip (11) and set aside for refitting to the new cartridge filter.
7. Seal the filter bag.

It is important to ensure that no dust enters the surrounding environment. If dust leaks out and reaches the floor during filter replacement, immediately pick up with a vacuum cleaner fitted with a HEPA filter.

The expended filter cartridge sealed in the bag must then be transported to the final storage location before contaminants and/or dust are able to spread.

Assembly

The filter medium must be intact. There must be no holes.

Note that the filter cartridge lacks contact protection. If handled negligently, the filter medium can be destroyed.

1. Fit the large and small sealing strips (11, 10), the mounting plate (9) and nuts (8) to the new cartridge filter.
2. Tilt in the underside of the crank rim (5) on the filter cartridge and place gently on the filter brushes (6).
3. Carefully insert the new filter cartridge horizontally until the crank rim falls down from the filter brushes.
4. Push in the bottom edge of the filter end (7) until the cartridge is centred in the fan inlet.

Check that the filter hatch seal has not become damaged. Replace the seal if necessary.

5. Refit and screw the filter hatch (3) onto the assembly. Make sure the filter cartridge is aligned with the hole in the filter hatch and verify the seal between the hatch and the assembly.
6. Refit and screw on the crank (1).

8.4 Emptying the dust collector

It is important to ensure that no dust enters the surrounding environment. If dust reaches the floor when emptying the dust collector, immediately pick up with a vacuum cleaner fitted with a HEPA filter.

The dust collector should be emptied regularly to the dust collector and/or dust bag from becoming too heavy for normal manual handling (max. 20 kg).

If there is no pallet truck available, the CFE HS accessory can be used when detaching the dust collector.

Check that the dust collector seal has not become damaged.
Replace the seal if necessary.

1. Manoeuvre a suitable pallet truck underneath the dust collector, see **Fig. 21**.
2. Unscrew the pressure distribution hose from the dust collector.

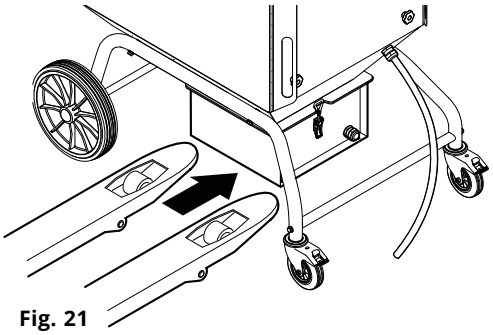

Fig. 21

3. Loosen the eccentric lock, raise the pallet truck up to the dust collector and use the pallet truck to pull put the collector. See **Fig. 22** as reference.
4. Seal the dust bag and carefully remove it from the dust collector. Dispose of the dust bag according to applicable laws and regulations.
5. If necessary, clean the dust collector.

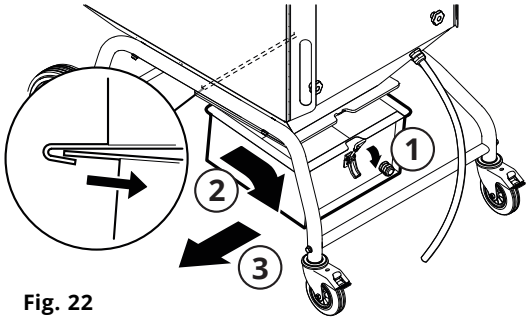

Fig. 22

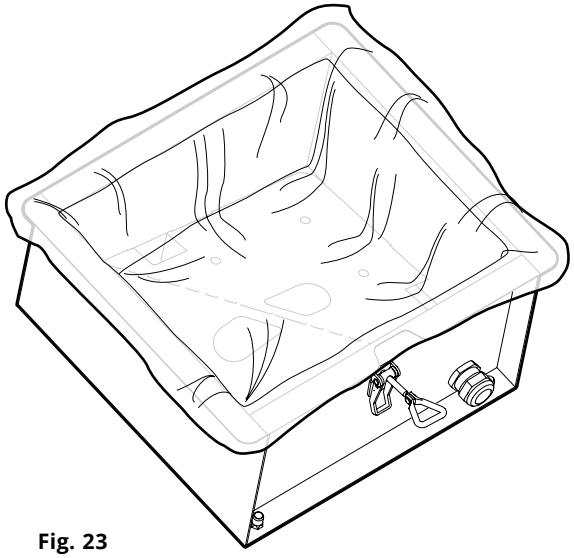

Fig. 23

6. Place an new Dust Bag CMF PSW3 correctly into the dust collector, see **Fig. 23**.
7. Slide the dust collector under the straining compartment, see **Fig. 22** as reference.
8. Hook the eccentric lock into its hook and tighten. If necessary, adjust the eccentric lock.
9. Screw the pressure distribution hose to the dust container.

8.5 Extraction arm

Adjusting friction joints

Adjust the friction joints as shown in **Fig. 13** and **Fig. 14.**

8.6 Checking air connections

1. Unscrew the top panel and set down on the exhaust grate without disconnecting the electrical connectors.
2. Make sure that the hoses to the differential pressure gauge are correctly connected and that there is no debris in the hoses. Rectify if necessary.
3. Refit the top panel.

9 Decommissioning

9.1 Final decommissioning/ disassembly/disposal

Final decommissioning and disassembly of the product may only be done by authorized personnel wearing protective gear. The handling and correct removal of the various types of materials must be in accordance with the applicable legal requirements.

Please contact FUMEX if you have any questions about the various types of waste.

10 Technical information

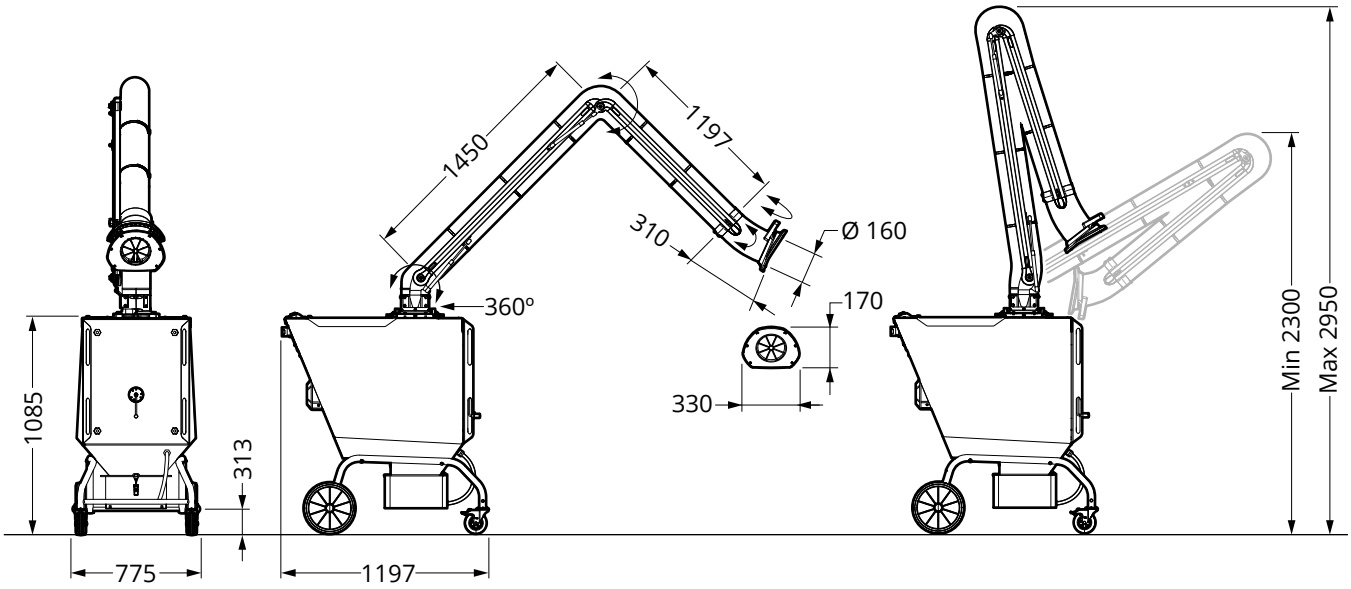

Fig. 24

10.1 Technical data

Dimensions: ..... See **Fig. 24**
Weight: ..... 145 kg
Voltage: ..... 400 V 3~
Frequency: ..... 50 Hz
Power: ..... 1.5 kW
Current: ..... 7.7 A
Enclosure class: IP54
Number of filter cartridges: ..... 1 st
Filter area: ..... 14 m^2
Airflow: ..... 1800 m^3/h

Sound level
Standard: ..... 75 dB (A)
With Silencer CMF SI: ..... -4 dB (A)
With Silencer CMF SI and CMF SE: .. -3 dB (A)

Temperature limits
Operating temperature: ..... +5 °C till +60 °C
Ambient temperature: ..... +5 °C till +50 °C
Transport & storage temperature: .. -25 °C till +60 °C
Max. humidity: ..... 80 %

Alarm limits for filter cleaning
Audiable alarm: ..... 1600 Pa (~600 m^3/h)

10.2 Circuit diagram electronics

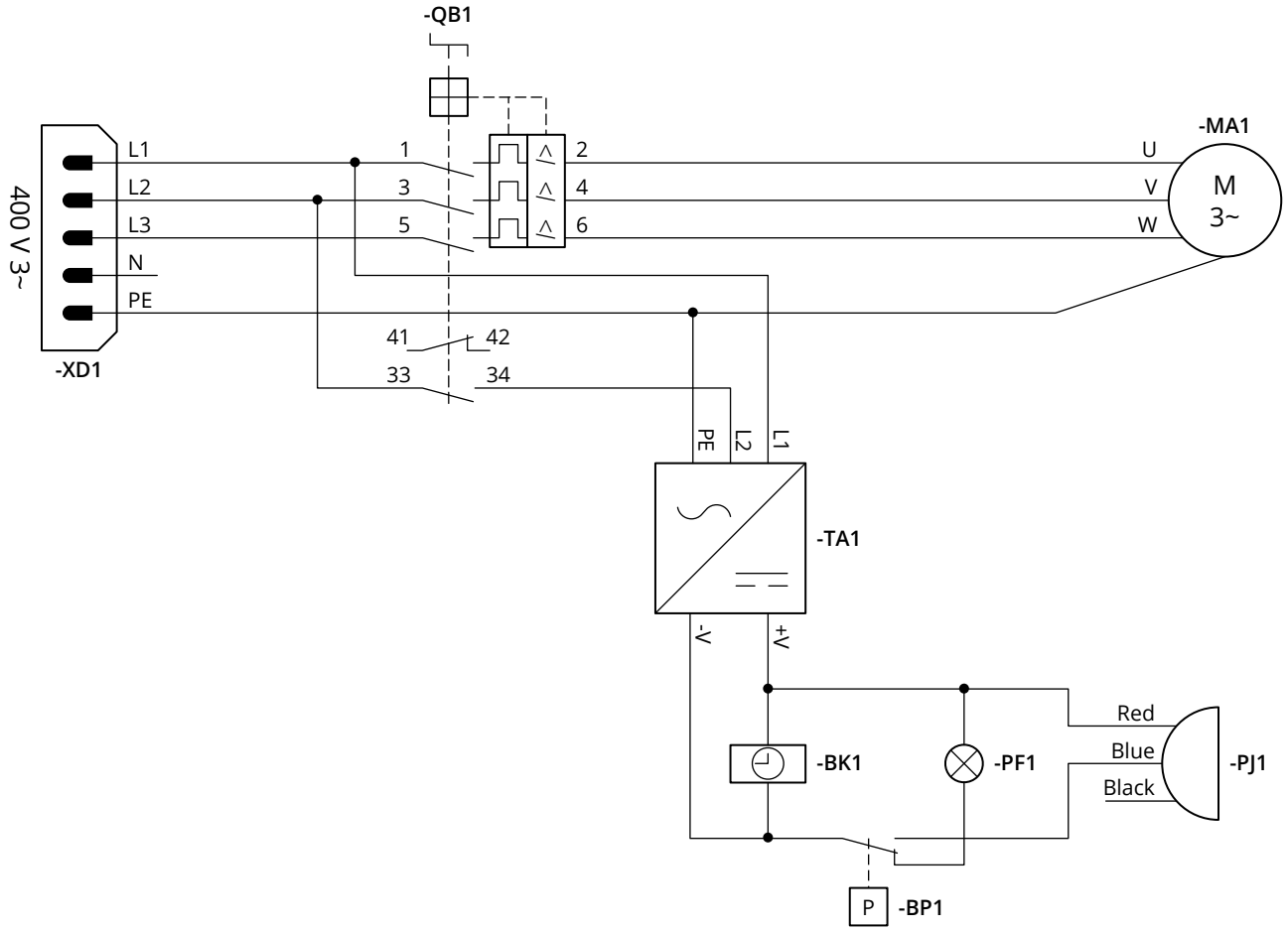

10.3 Exploded-view drawing

10.3.1 Filter unit

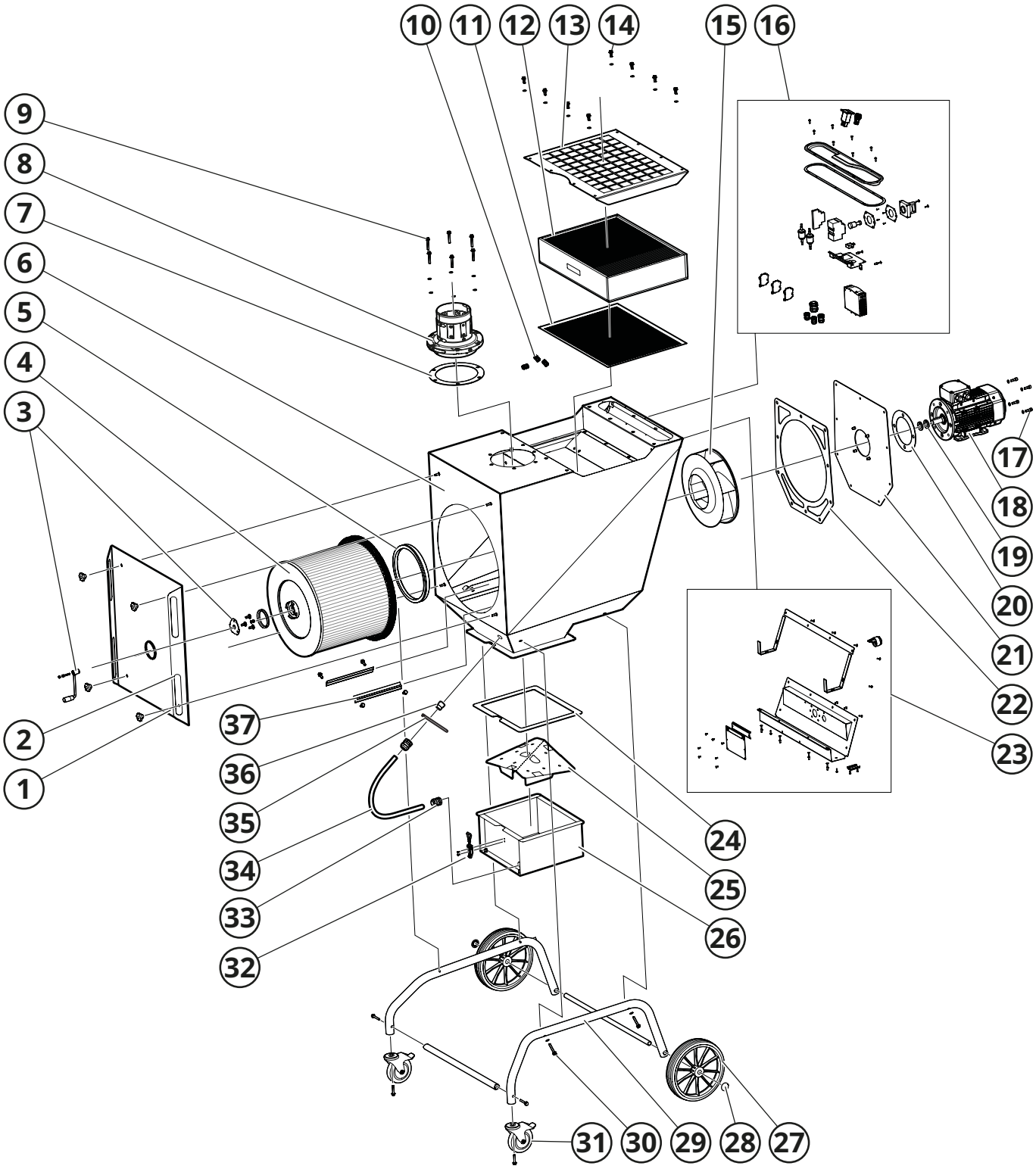

10.3.2 Extraction arm

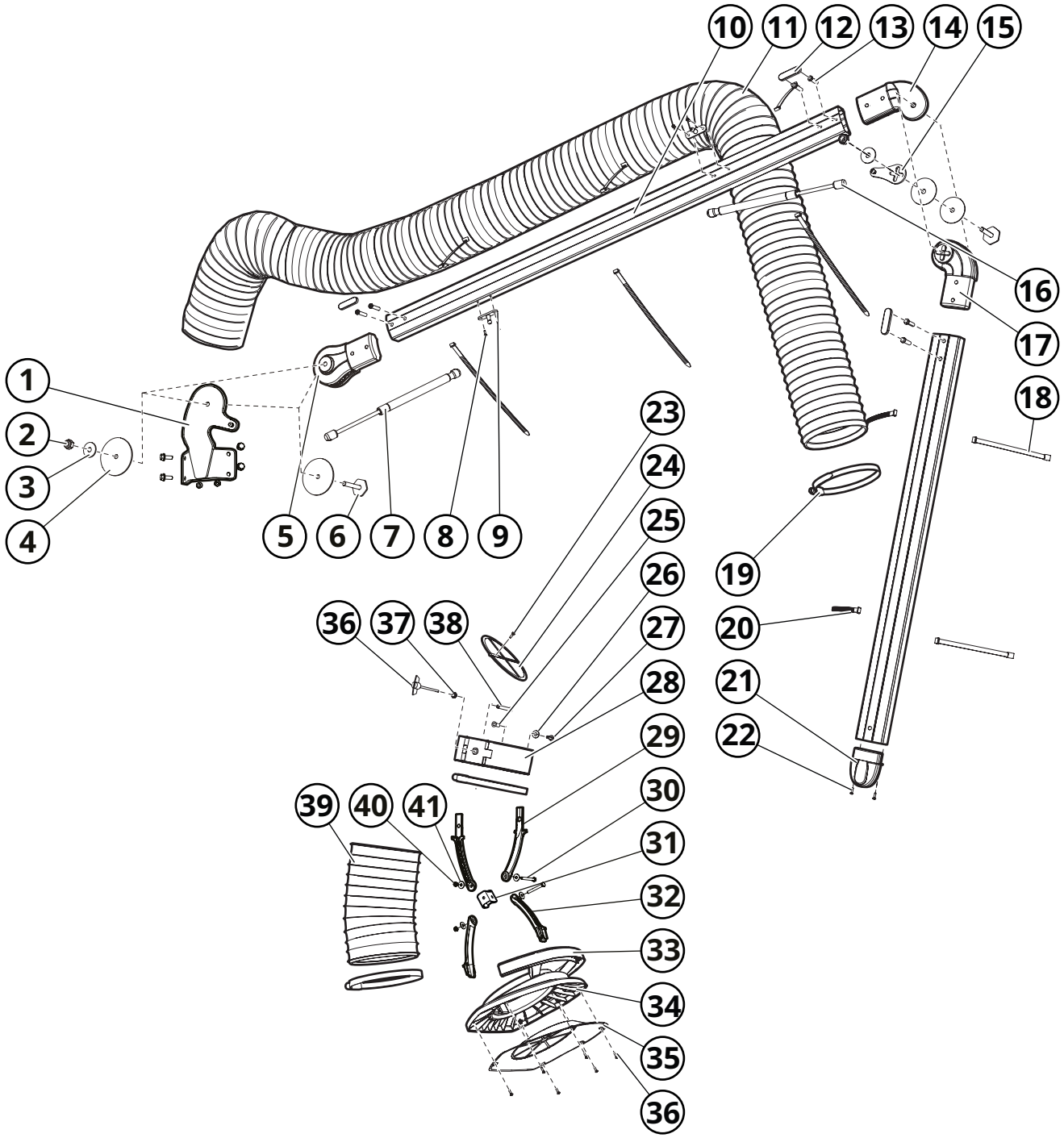

11 Accessories & Spare Parts

Silencer CMF SI

Reduces the operating noise of the machine. Can be combined with Silencer CMF SE.

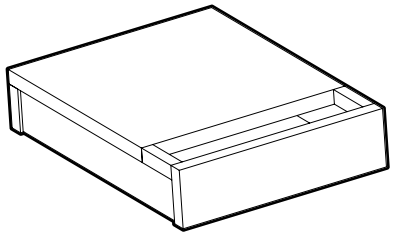

Fig. 25

Silencer CMF SE

Reduces the operating noise of the machine. Can be combined with Silencer CMF SI or HEPA filter CFH.

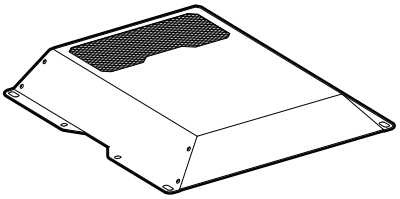

Fig. 26

HEPA Filter CFH 120

Filters the finest particles according to HEPA 14, before the air recirculates from the filter. Top mounted on the filter unit.

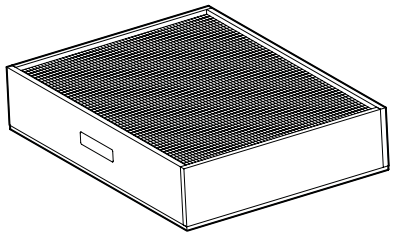

Fig. 27

Filter Cartridge CFS 140W3

Filter cartridge for use during normal loads in ISO 15012-1 systems for safety during welding. The filter consists of a corrugated polyester material coated with a Teflon membrane that is protected by expanded metal on the inside.

The purchase of CFS 140W3 includes Filter Bag CFE PCW3.

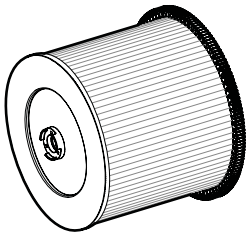

Fig. 28

Spark Trap PR GF

Protects the filter from large particles and reduces the risk of sparks.

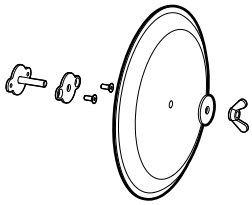

Fig. 29

CMF PCW3

Filter bag for contact-free filter cartridge replacement.

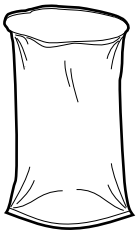

Fig. 30

CMF PSW3

Dust bag for contact-free dust collector emptying.

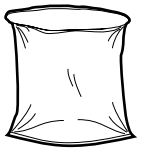

Fig. 31

CFE HS

Wheel set for dust collector emptying.

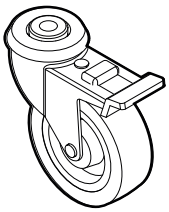

Fig. 32

Filter Brush CMF 137568

Brushes (2-pack) that remove particles and dust from the filter medium during filter cleaning.

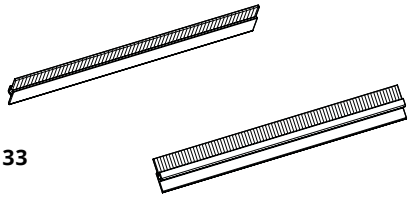

Fig. 33

Extension Hose PFS-160

Enables work in difficult and remote areas. With magnetic nozzle and quick coupling. Available in lengths of 4 metres and 8 metres.

Fig. 34

12 Notes

FUMEX SUPPLIES EXTRACTION ARMS · VEHICLE EXHAUST EXTRACTION · FANS · FILTERS · CONTROLS · WORKSHOP EQUIPMENT

FUMEX

Verkstadsvägen 2, 93161 Skellefteå, Sweden • Tel.: +46 910-361 80 • Fax: +46 910-130 22 • E-mail: info@fumex.se
www.fumex.com